PROFESSIONAL LOUDSPEAKERS

Made in Italy

6FE200
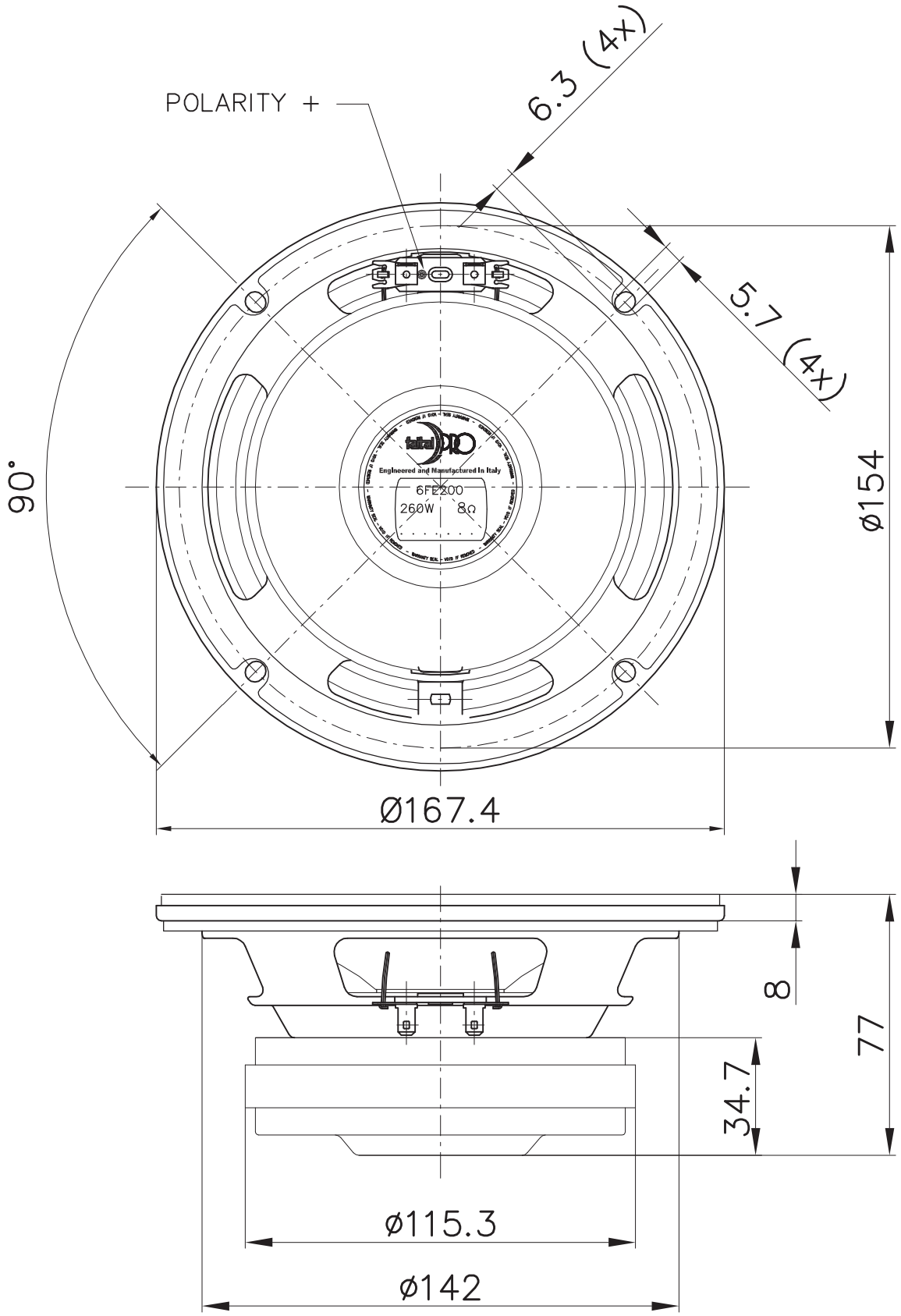
6” - 130 W - 95 dB - 8Ω