PROFESSIONAL LOUDSPEAKERS
Made in Italy

8RS250
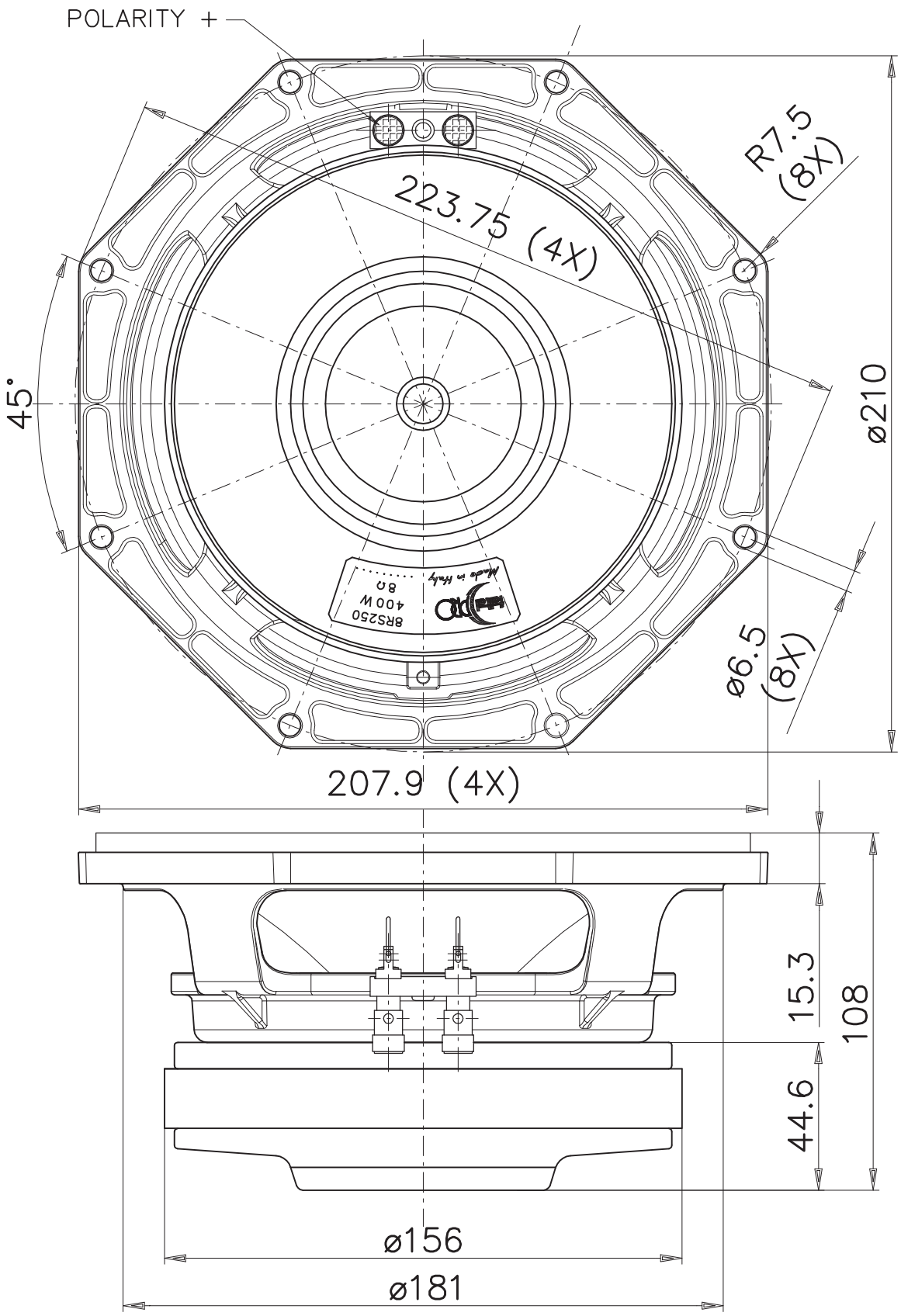
8” - 200 W - 93 dB - 8Ω