PROFESSIONAL LOUDSPEAKERS

Made in Italy

2FE24
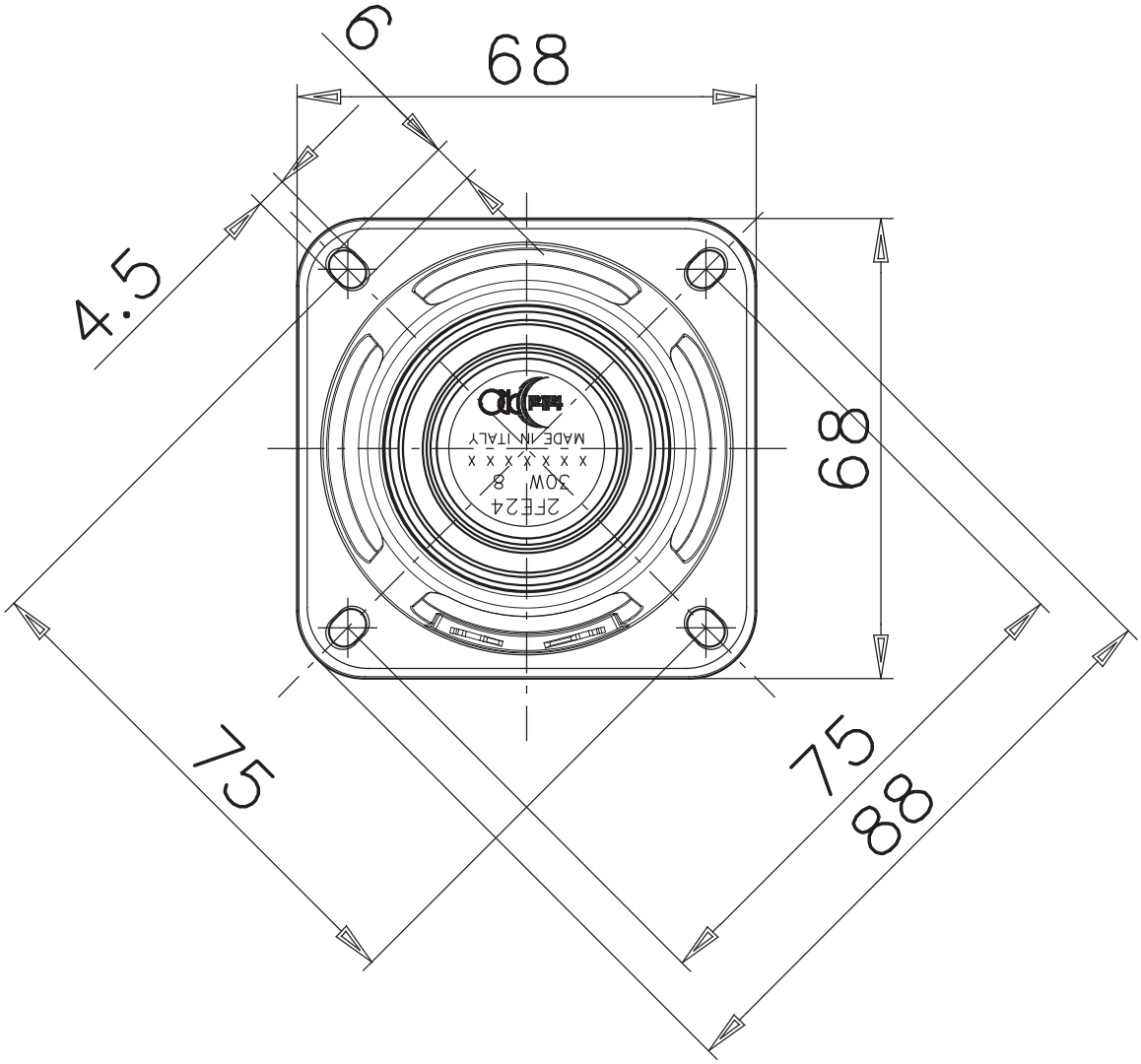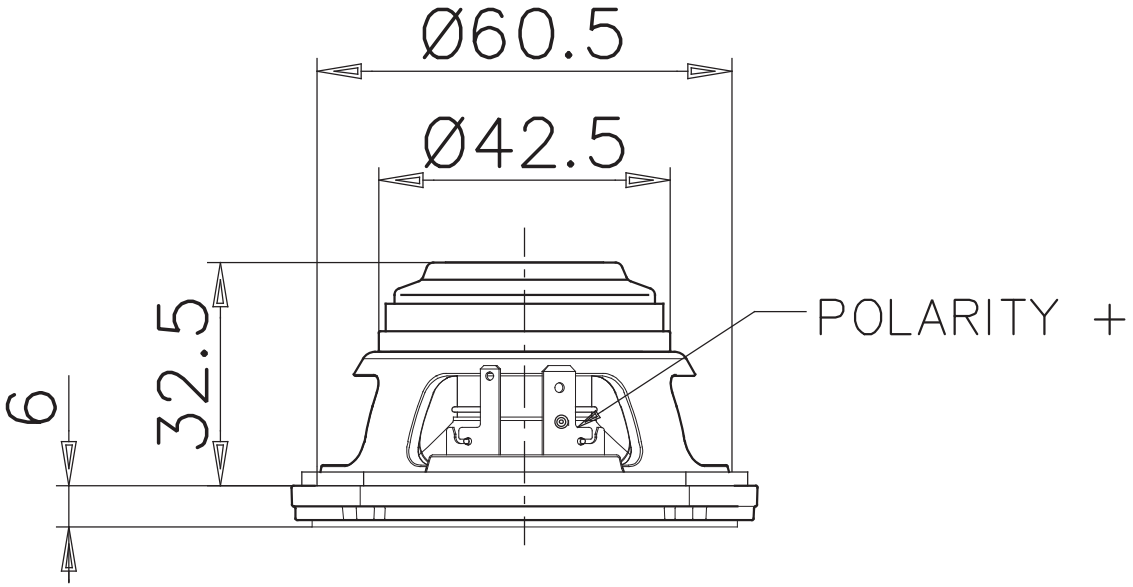
2.5” - 20W - 85 dB - 8Ω