PROFESSIONAL LOUDSPEAKERS

Made in Italy

15FH500
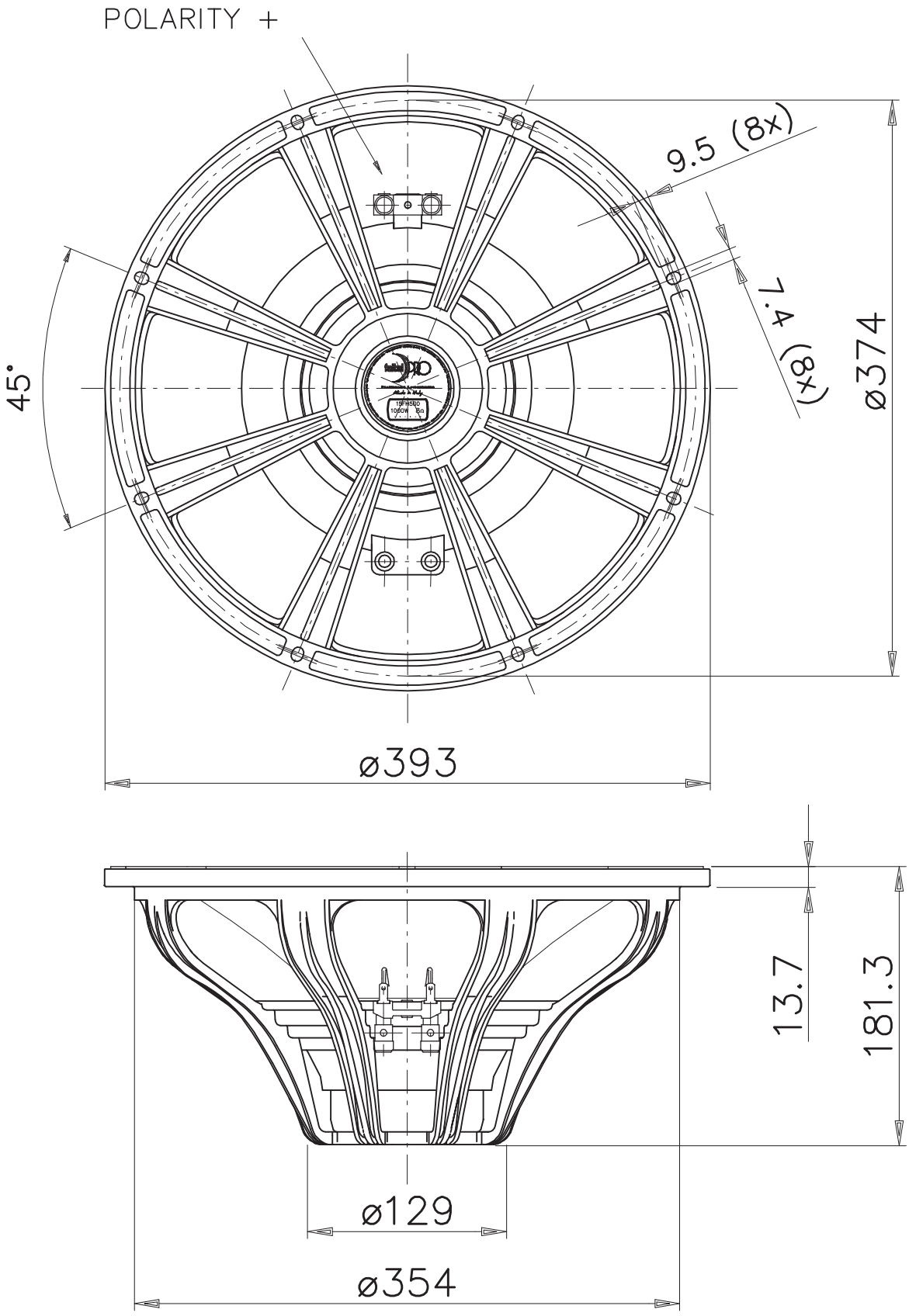
15” - 500 W - 97 dB - 4Ω