PROFESSIONAL LOUDSPEAKERS

Made in Italy

12PR320
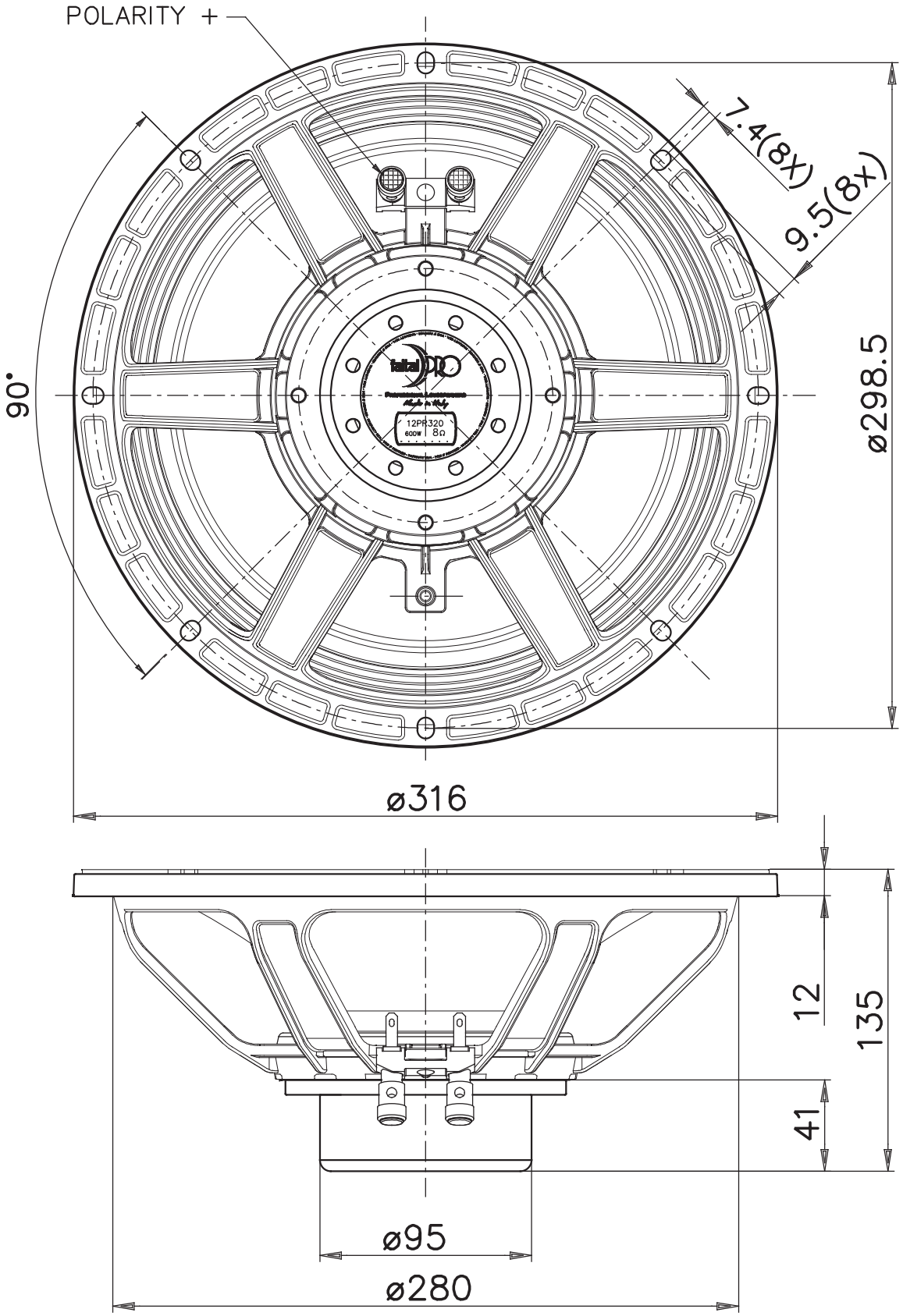
12” - 300 W - 96 dB - 16Ω