PROFESSIONAL LOUDSPEAKERS

Made in Italy

10FE300
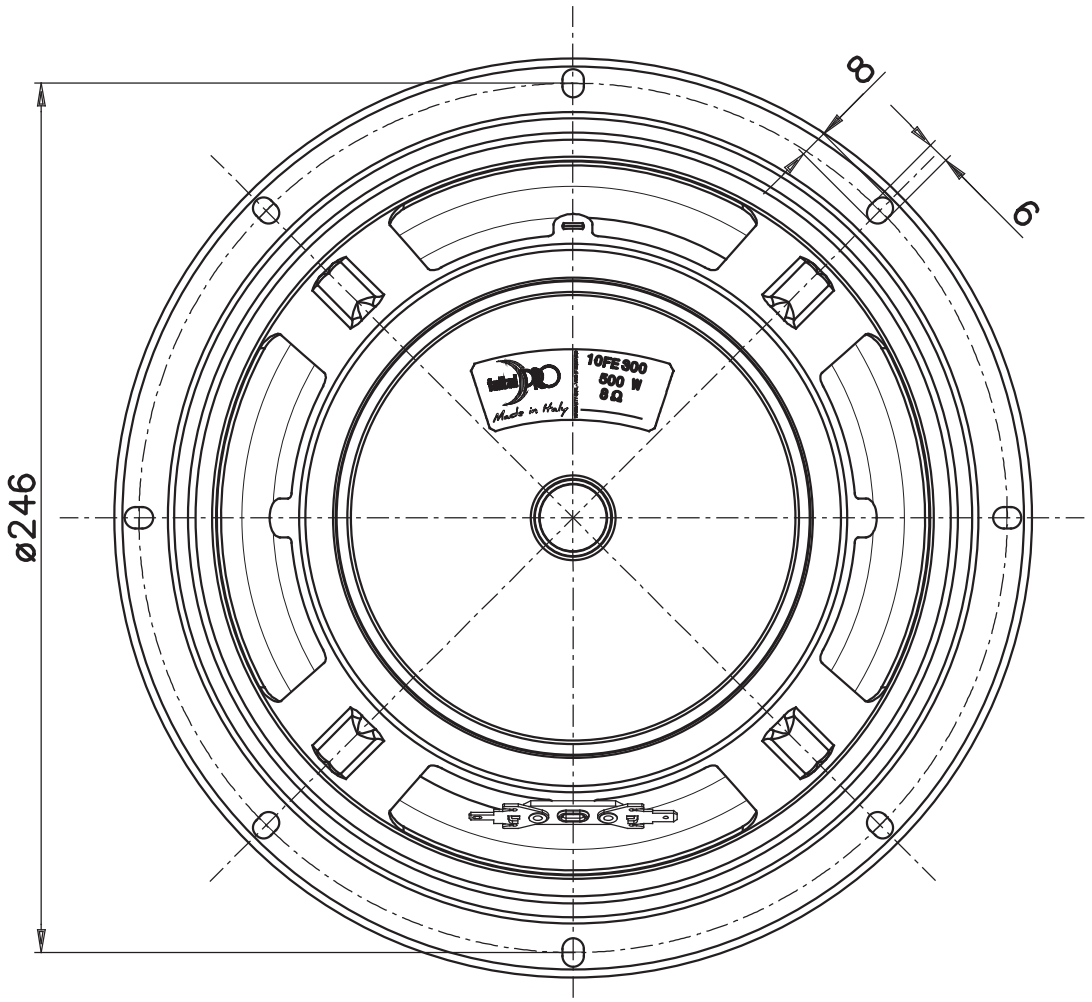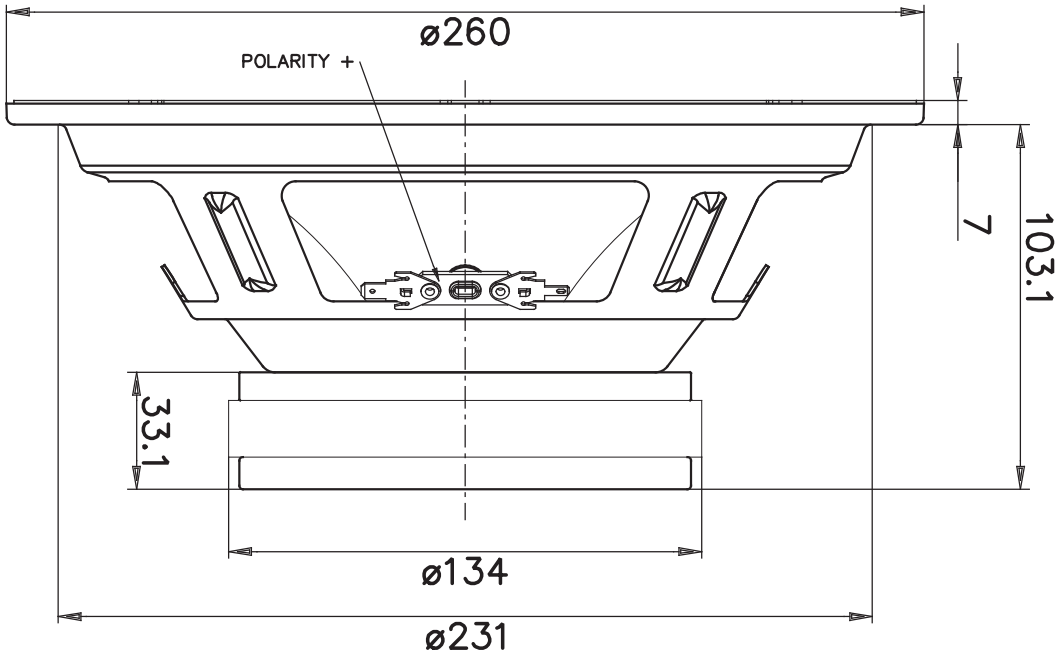
10” - 250 W - 96 dB - 8Ω