PROFESSIONAL LOUDSPEAKERS

Made in Italy

18XL1600
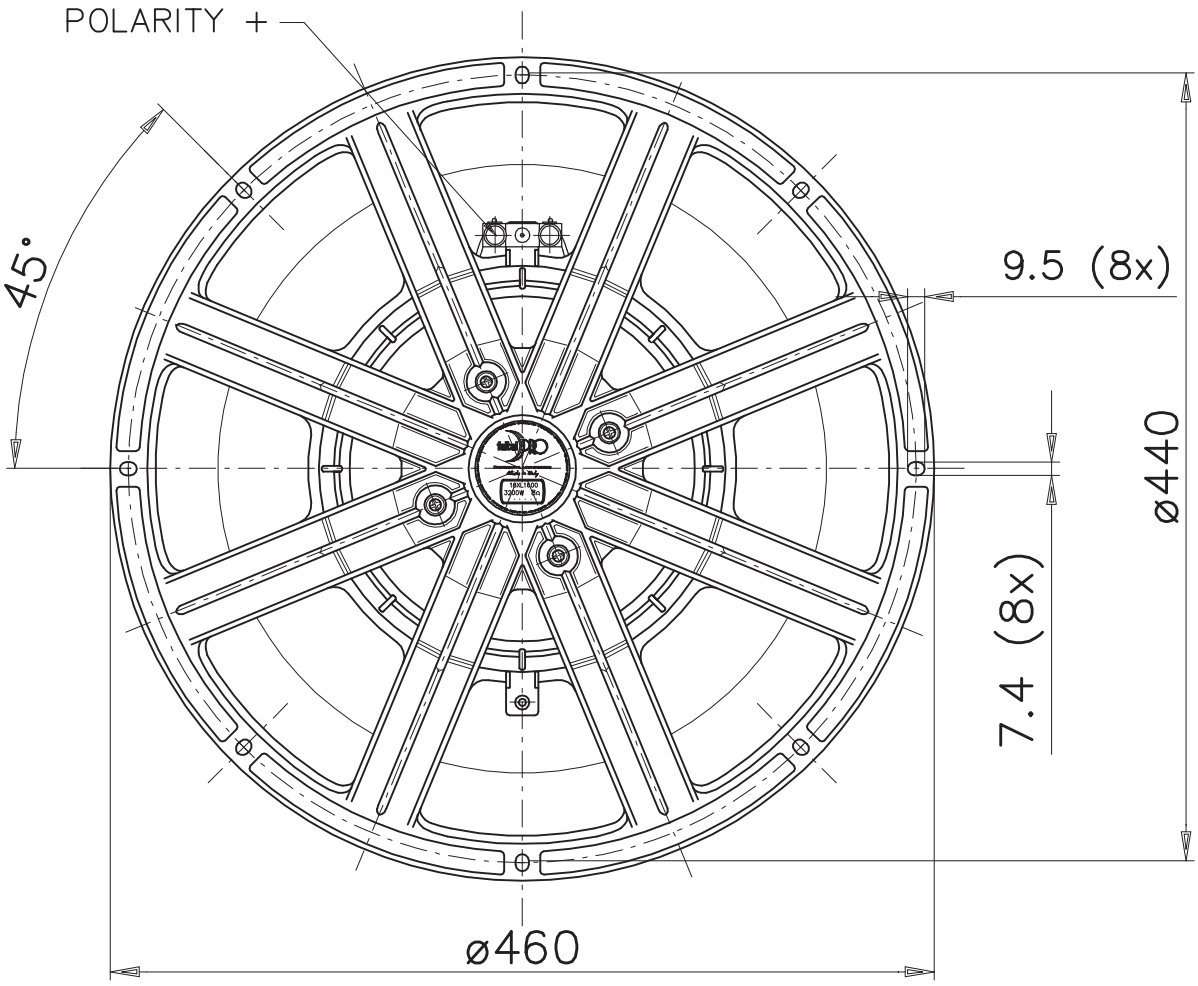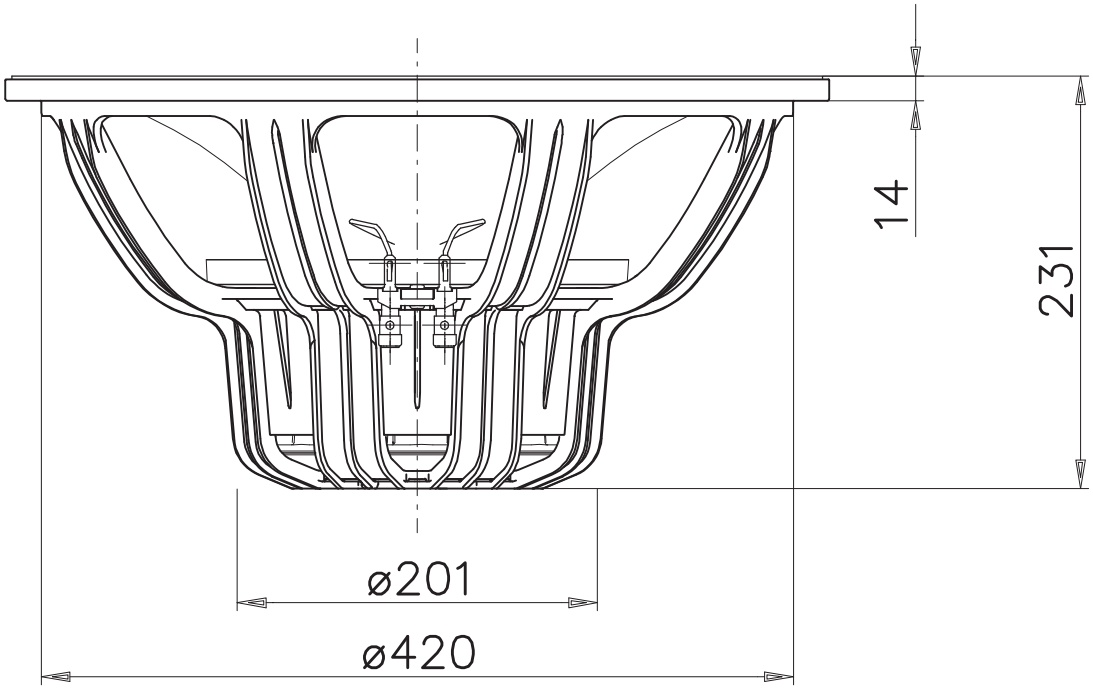
18” - 1600 W - 98 dB - 4Ω