PROFESSIONAL LOUDSPEAKERS

Made in Italy

18FX600
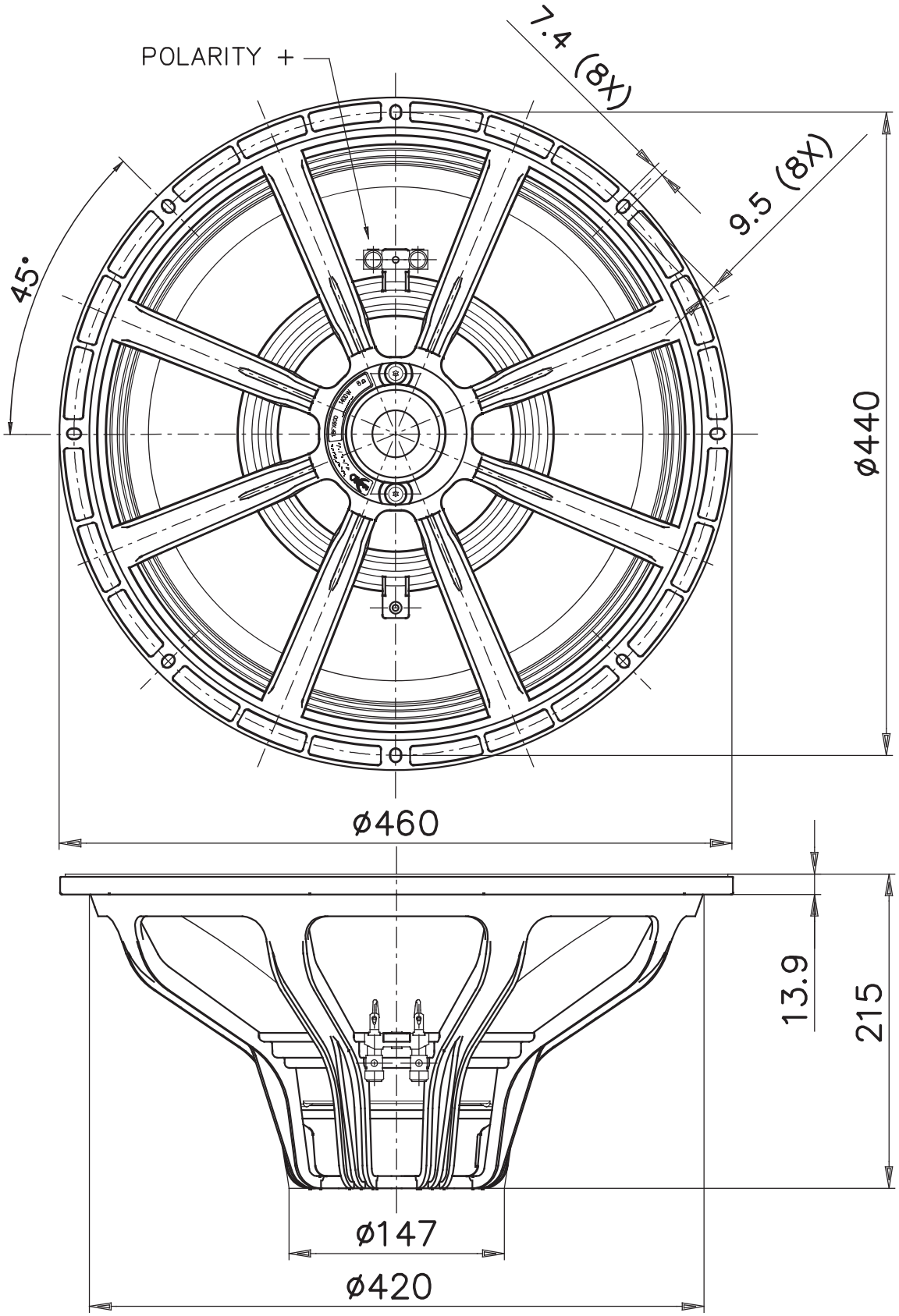
18” - 700 W - 99 dB - 8Ω