PROFESSIONAL LOUDSPEAKERS

Made in Italy

8PR200
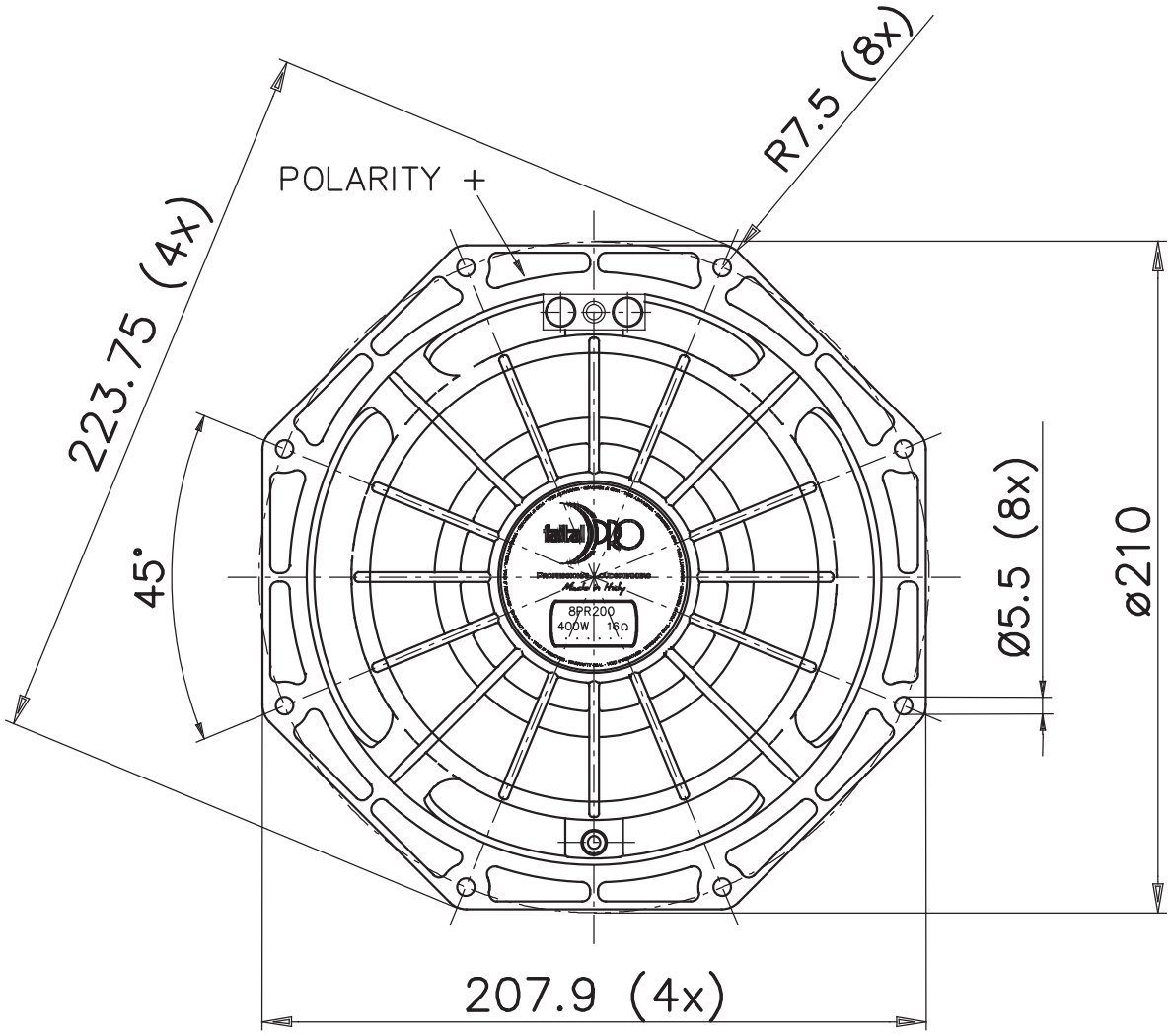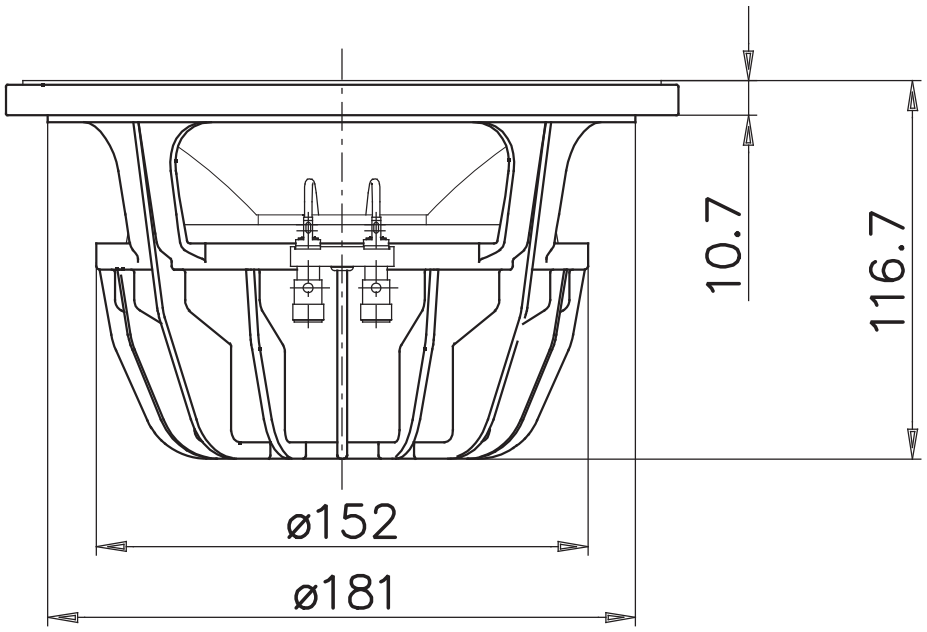
8” - 200 W - 94 dB - 16Ω