PROFESSIONAL LOUDSPEAKERS
Made in Italy

6RS140
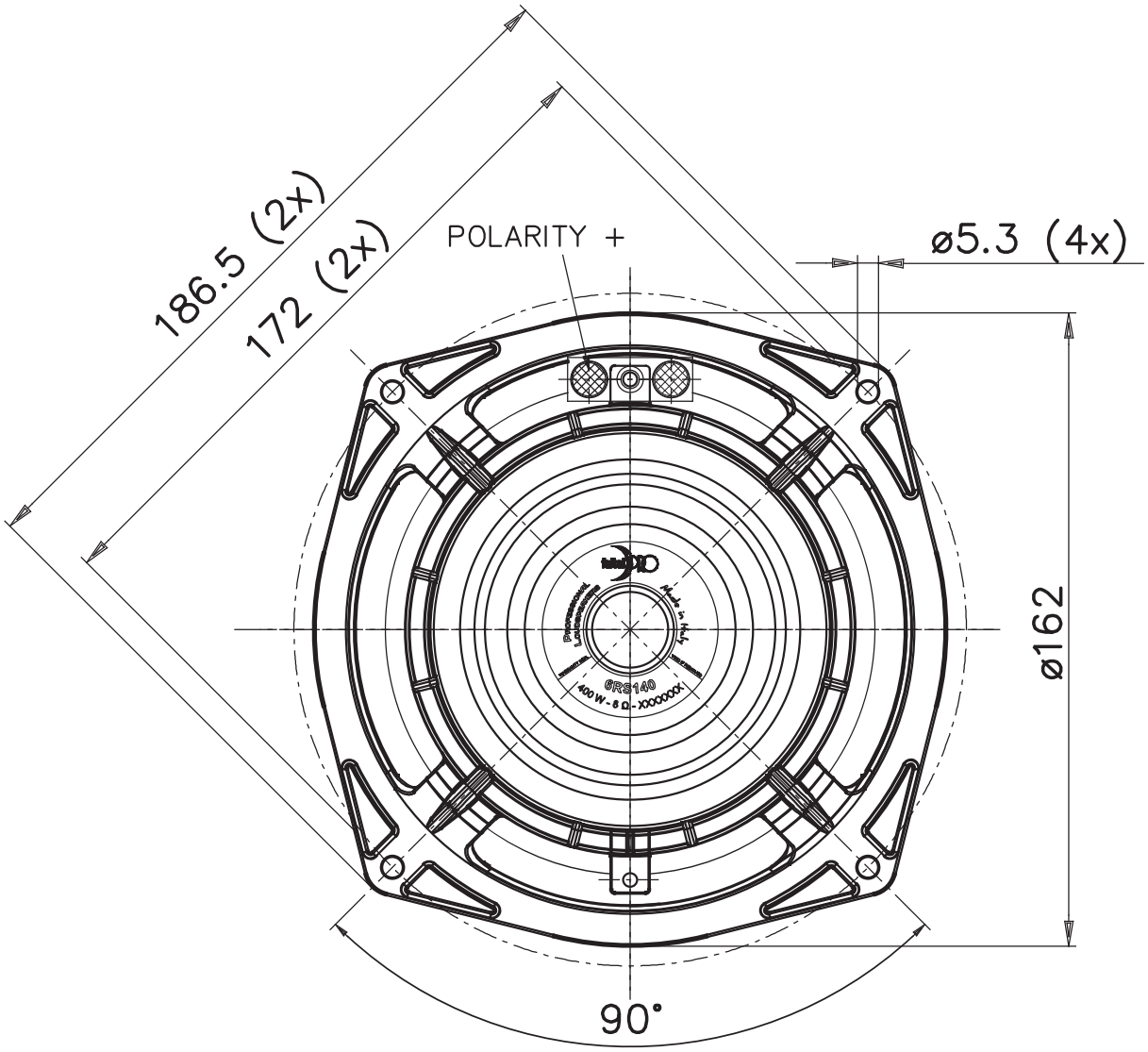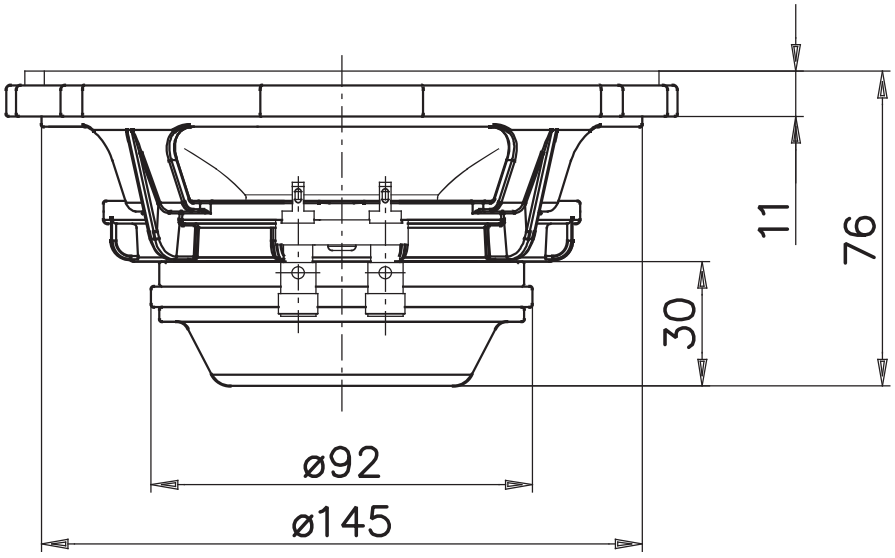
6” - 200 W - 93 dB - 8Ω