faital PRO PROFESSIONAL LOUDSPEAKERS

4FE30

4" - 30 W - 91 dB - 16 Ohm

NOMINAL SPECIFICATIONS

Nominal Diameter	100 mm (4 in)
Overall Diameter	100.7 mm (3.96 in)
Bolt Circle Diameter	81.5 mm (3.2 in)
Baffle Cutout Diameter	93.5 mm (3.68 in)
Depth	50 mm (2 in)
Flange and Gasket Thickness	1.5 mm (0.3 in)
Net Weight	**260 g (0.6 lb)**
Shipping Box (Single Carton Box - 8 units)	302 x 275 x 186 mm (11.89 x 10.82 x 7.32 in)
Shipping Weight (8 units)	3.1 kg (6.83 lb)

NOTES:

Packaged and sold in multiples of 8 units

(1) 2 Hours Test According to AES 2-1984 Rev. 2003

(2) Maximum power is defined as 3dB greater than nominal power.

(3) NBR (Rubber)

(4) Xmax= [(winding depth - magnetic gap depth)/2] + (magnetic gap depth/3)

(5) Maximum excursion before permanent damage

TECHNICAL PARAMETERS

Nominal Impedance	16 Ohm
Minimum Impedance	13.1 Ohm
AES Power Handling **(1)**	30 W
Maximum Power Handling (2)	**60 W**
Sensitivity (1W/1m)	**91 dB**
Frequency Range	90÷20000 Hz
Voice Coil Diameter	**19 mm (0.75 in)**
Winding Material	Al
Former Material	Kapton
Winding Depth	5 mm (0.20 in)
Magnetic Gap Depth	**4 mm (0.16 in)**
Flux Density	1.4 T
Magnet	Neodymium Ring
Basket Material	Steel
Demodulation	No
Cone Surround **(3)**	Half Roll
NET Air Volume filled by Loudspeaker	0.075 dm^3 (0.003 ft^3)
Spider Profile	1x constant height waves

THIELE & SMALL PARAMETERS

Fs	100 Hz
Re	12.3 Ohm
Qes	1.02
Qms	3.84
Qts	0.8
Vas	1.6 dm^3 (0.06 ft^3)
Sd	48 cm^2 (7.44 in^2)
Xmax **(4)**	1.83 mm
Xdamage **(5)**	6.8 mm
Mms	4 g
Bl	5.5 N/A
Le	0.1 mH
Mmd	3.6 g
Cms	0.63 mm/N
Rms	0.65 kg/s
Eta Zero	0.2 %
EBP	98 Hz

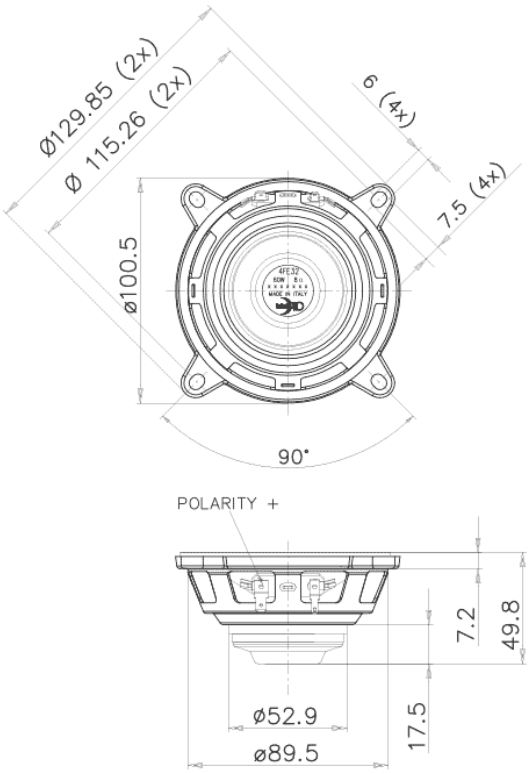

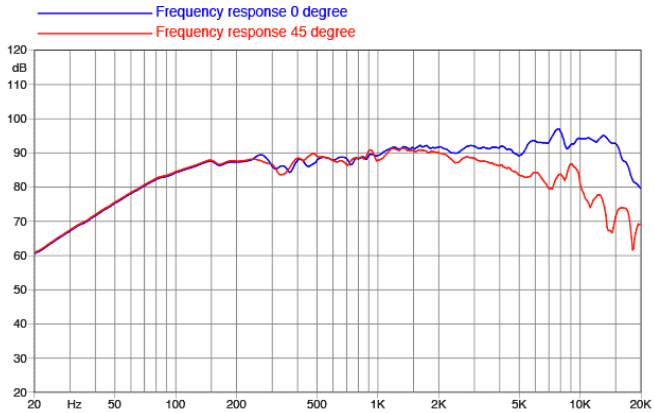

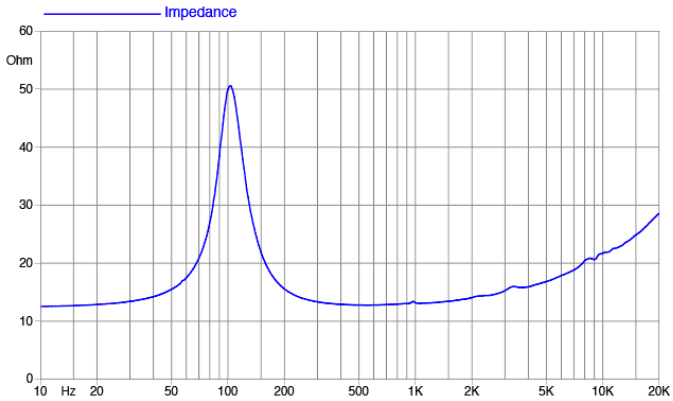

©Copyright 2026 **Faital S.p.A.** • All rights reserved.