PROFESSIONAL LOUDSPEAKERS

6FE200

6" - 130 W - 95 dB - 4 Ohm



NOMINAL SPECIFICATIONS

Nominal Diameter	160 mm (6 in)
Overall Diameter	167.4 mm (6.59 in)
Bolt Circle Diameter	154 mm (6.06 in)
Baffle Cutout Diameter	144 mm (5.67 in)
Depth	77 mm (3.03 in)
Flange and Gasket Thickness	8 mm (0.31 in)
Net Weight	**2 kg (4.4 lb)**
Shipping Box (Single Carton Box)	190 x 185 x 103 mm (7.5 x 7.3 x 4.1 in)
Shipping Weight	2.2 kg (4.9 lb)

PART NUMBER

Faston Terminals - 4 Ohm Version	01604055

NOTES:

(1) 2 Hours Test According to AES 2-1984 Rev. 2003

(2) Maximum power is defined as 3dB greater than nominal power.

(3) Treated Polycotton

(4) Xmax= [(winding depth - magnetic gap depth)/2] + (magnetic gap depth/3)

(5) Maximum excursion before permanent damage

TECHNICAL PARAMETERS

Nominal Impedance	4 Ohm
Minimum Impedance	3.6 Ohm
AES Power Handling **(1)**	130 W
Maximum Power Handling (2)	**260 W**
Sensitivity (1W/1m)	**95 dB**
Frequency Range	85÷6000 Hz
Voice Coil Diameter	**37 mm (1.46 in)**
Winding Material	Al
Former Material	Kapton
Winding Depth	11.9 mm (0.47 in)
Magnetic Gap Depth	**8 mm (0.31 in)**
Flux Density	1 T
Magnet	Ferrite Ring
Basket Material	Steel
Demodulation	No
Cone Surround **(3)**	M-Roll
NET Air Volume filled by Loudspeaker	0.45 dm^3 (0.016 ft^3)
Spider Profile	1x constant height waves

THIELE & SMALL PARAMETERS

Fs	120 Hz
Re	3 Ohm
Qes	0.45
Qms	6.2
Qts	0.42
Vas	4.3 dm^3 (0.15 ft^3)
Sd	131 cm^2 (20.3 in^2)
Xmax **(4)**	4.62 mm
Xdamage **(5)**	10.4 mm
Mms	9.7 g
Bl	7 N/A
Le	0.20 mH
Mmd	8.0 g
Cms	0.18 mm/N
Rms	1.2 kg/s
Eta Zero	1.61 %
EBP	267 Hz

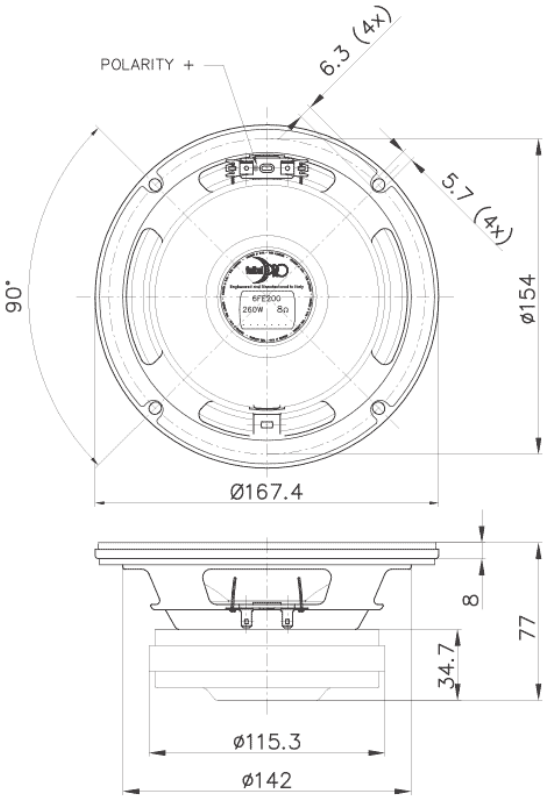

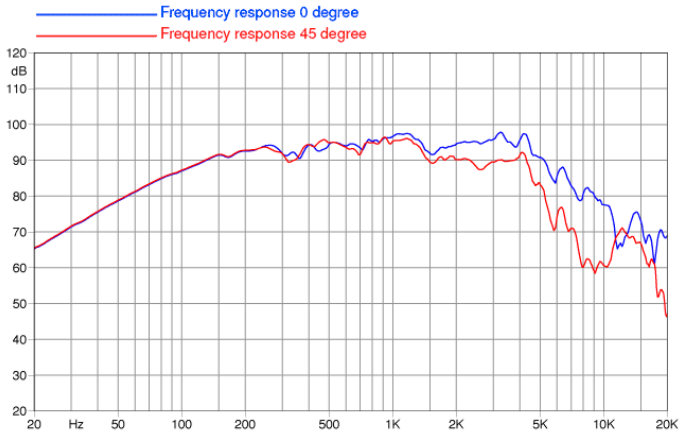

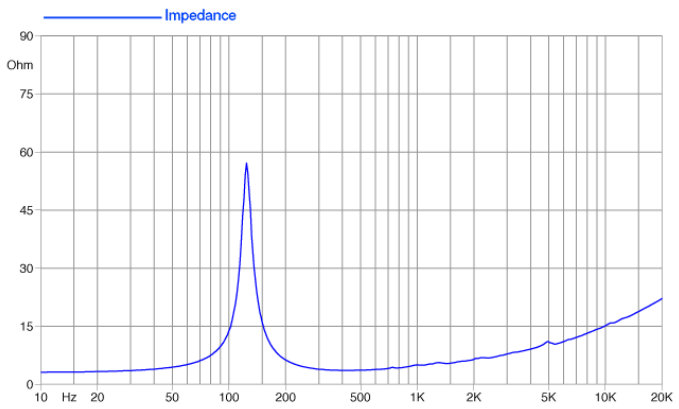

©Copyright 2026 **Faital S.p.A.** • All rights reserved.