faital PRO PROFESSIONAL LOUDSPEAKERS

# 4FE35

## 4" - 30 W - 91 dB - 4 Ohm



### NOMINAL SPECIFICATIONS

| | |
|---|---|
| Nominal Diameter | 100 mm (4 in) |
| Overall Diameter | 129.85/100.5 mm (5.11/3.96 in) |
| Bolt Circle Diameter | 115.26 mm (4.54 in) |
| Baffle Cutout Diameter | 91.5 mm (3.60 in) |
| Depth | 49.8 mm (1.96 in) |
| Flange and Gasket Thickness | 7.2 mm (0.28 in) |
| **Net Weight** | **570 g (1.3 lb)** |
| Shipping Box (Single Carton Box - 8 units) | 225 x 225 x 150 mm (8.9 x 8.9 x 5.9 in) |
| Shipping Weight (8 units) | 5 kg (11.0 lb) |

### PART NUMBER

| | |
|---|---|
| Faston Terminals - 4 Ohm Version | 01004109 |

### TECHNICAL PARAMETERS

| | |
|---|---|
| Nominal Impedance | 4 Ohm |
| Minimum Impedance | 3.7 Ohm |
| AES Power Handling **(1)** | 30 W |
| **Maximum Power Handling (2)** | **60 W** |
| **Sensitivity (1W/1m)** | **91 dB** |
| Frequency Range | 90÷20000 Hz |
| **Voice Coil Diameter** | **19 mm (0.75 in)** |
| Winding Material | Al |
| Former Material | Kapton |
| Winding Depth | 4.8 mm (0.19 in) |
| **Magnetic Gap Depth** | **4 mm (0.16 in)** |
| Flux Density | 1.1 T |
| Magnet | Ferrite Ring |
| Basket Material | Steel |
| Demodulation | Copper Cap |
| Cone Surround **(3)** | Half Roll |
| NET Air Volume filled by Loudspeaker | 0.150 dm^3 (0.005 ft^3) |
| Spider Profile | 1x constant height waves |

### THIELE & SMALL PARAMETERS

| | |
|---|---|
| Fs | 100 Hz |
| Re | 3.3 Ohm |
| Qes | 0.90 |
| Qms | 3.9 |
| Qts | 0.73 |
| Vas | 2.4 dm^3 (0.09 ft^3) |
| Sd | 51.9 cm^2 (8.04 in^2) |
| Xmax **(4)** | 1.73 mm |
| Xdamage **(5)** | 6.8 mm |
| Mms | 3.9 g |
| Bl | 3 N/A |
| Le | 0.04 mH |
| Mmd | 3.5 g |
| Cms | 0.65 mm/N |
| Rms | 0.65 kg/s |
| Eta Zero | 0.26 % |
| EBP | 111 Hz |

**NOTES:**

**(1)** 2 Hours Test According to AES 2-1984 Rev. 2003
**(2)** Maximum power is defined as 3dB greater than nominal power.
**(3)** NBR (Rubber)
**(4)** Xmax= [(winding depth - magnetic gap depth)/2] + (magnetic gap depth/3)
**(5)** Maximum excursion before permanent damage

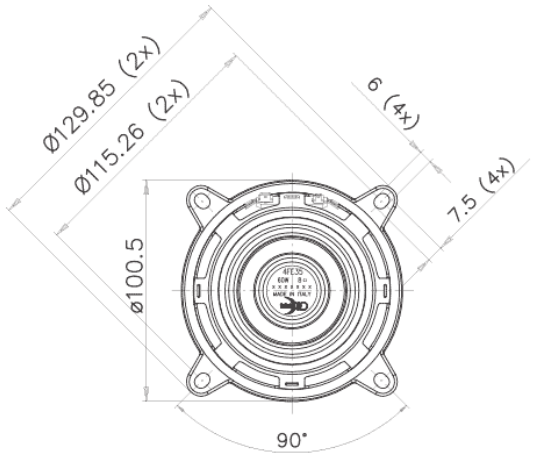


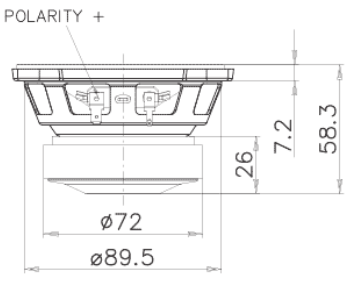


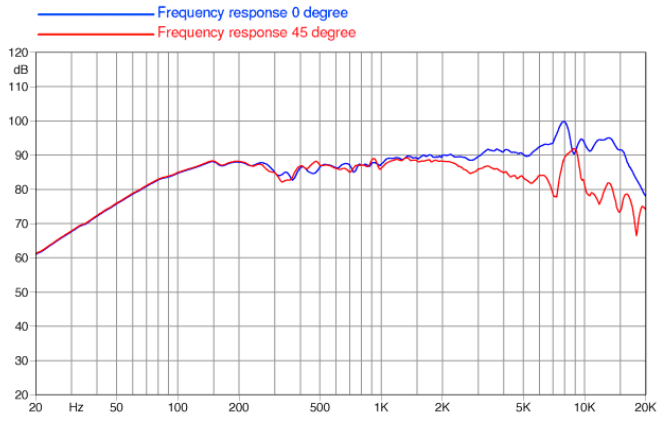


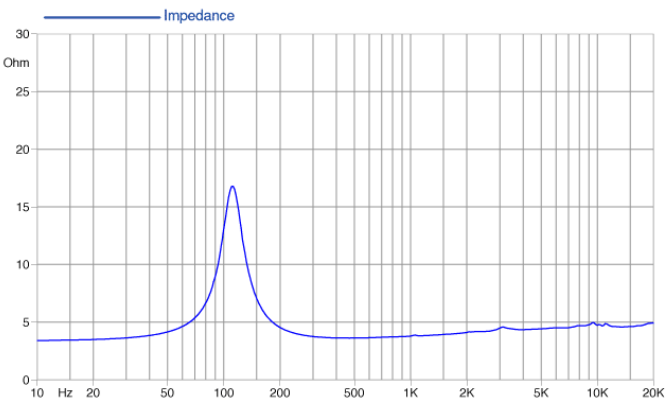



©Copyright 2026 **Faital S.p.A.** • All rights reserved.