faital PRO PROFESSIONAL LOUDSPEAKERS

3FE25

3" - 20 W - 91 dB - 4 Ohm



NOMINAL SPECIFICATIONS

Nominal Diameter	80 mm (3 in)
Overall Diameter	105.6/81 mm (4.16/3.19 in)
Bolt Circle Diameter	92 mm (3.62 in)
Baffle Cutout Diameter	73.6 mm (2.90 in)
Depth	54.5 mm (2.15 in)
Flange and Gasket Thickness	6.5 mm (0.26 in)
Net Weight	**545 g (1.2 lb)**
Shipping Box (Single Carton Box - 36 units)	285 x 285 x 255 mm (11.2 x 11.2 x 10.0 in)
Shipping Weight (36 units)	20.8 kg (45.9 lb)

PART NUMBER

Faston Terminals - 4 Ohm Version	00804135

NOTES:

(1) 2 Hours Test According to AES 2-1984 Rev. 2003
(2) Maximum power is defined as 3dB greater than nominal power.
(3) EPDM (Rubber)
(4) Xmax= [(winding depth - magnetic gap depth)/2] + (magnetic gap depth/3)
(5) Maximum excursion before permanent damage

TECHNICAL PARAMETERS

Nominal Impedance	4 Ohm
Minimum Impedance	3.5 Ohm
AES Power Handling **(1)**	20 W
Maximum Power Handling (2)	**40 W**
Sensitivity (1W/1m)	**91 dB**
Frequency Range	100÷20000 Hz
Voice Coil Diameter	**19 mm (0.75 in)**
Winding Material	Al
Former Material	Kapton
Winding Depth	4.8 mm (0.19 in)
Magnetic Gap Depth	**4 mm (0.16 in)**
Flux Density	1.1 T
Magnet	Ferrite Ring
Basket Material	Steel
Demodulation	Copper Cap
Cone Surround **(3)**	Half Roll
NET Air Volume filled by Loudspeaker	0.125 dm^3 (0.004 ft^3)
Spider Profile	1x constant height waves

THIELE & SMALL PARAMETERS

Fs	110 Hz
Re	3.3 Ohm
Qes	0.60
Qms	3.9
Qts	0.52
Vas	1.3 dm^3 (0.05 ft^3)
Sd	33 cm^2 (5.12 in^2)
Xmax **(4)**	1.73 mm
Xdamage **(5)**	7.9 mm
Mms	2.4 g
Bl	3 N/A
Le	0.04 mH
Mmd	2.2 g
Cms	0.87 mm/N
Rms	0.4 kg/s
Eta Zero	0.28 %
EBP	183 Hz

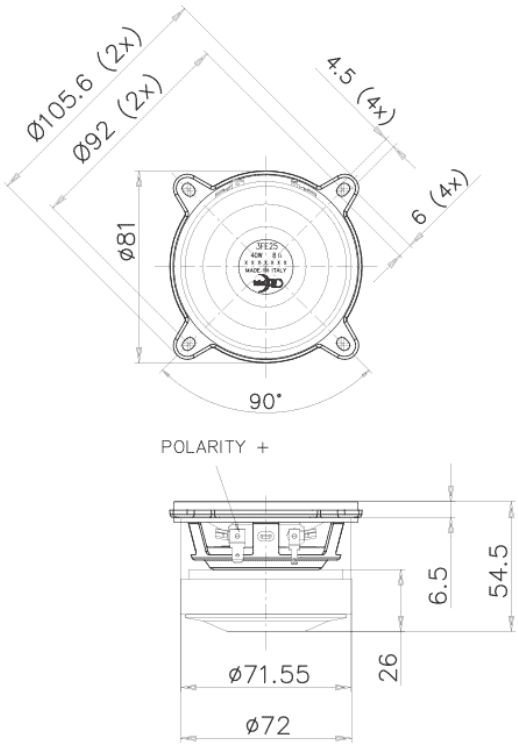

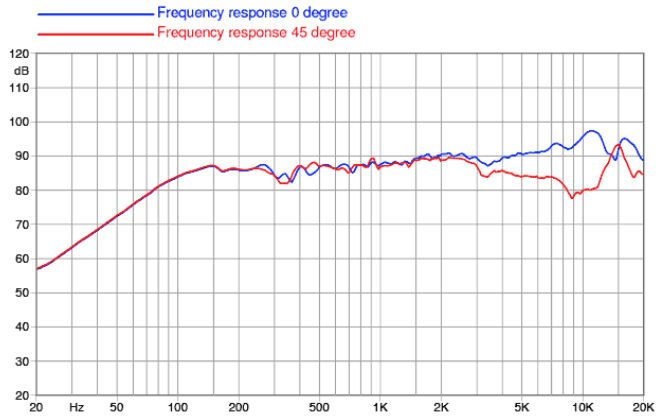

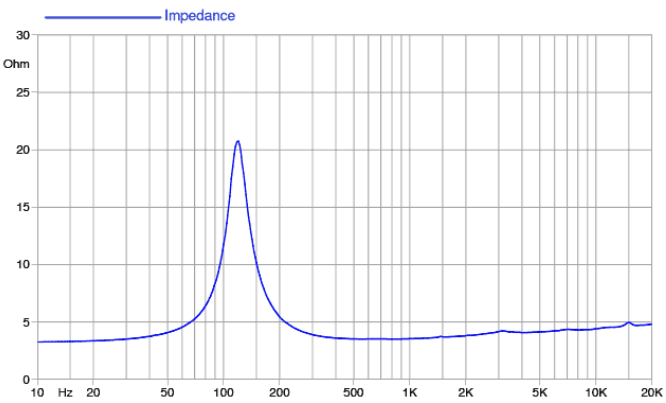

©Copyright 2026 **Faital S.p.A.** • All rights reserved.