PROFESSIONAL LOUDSPEAKERS

Made in Italy

18FH500
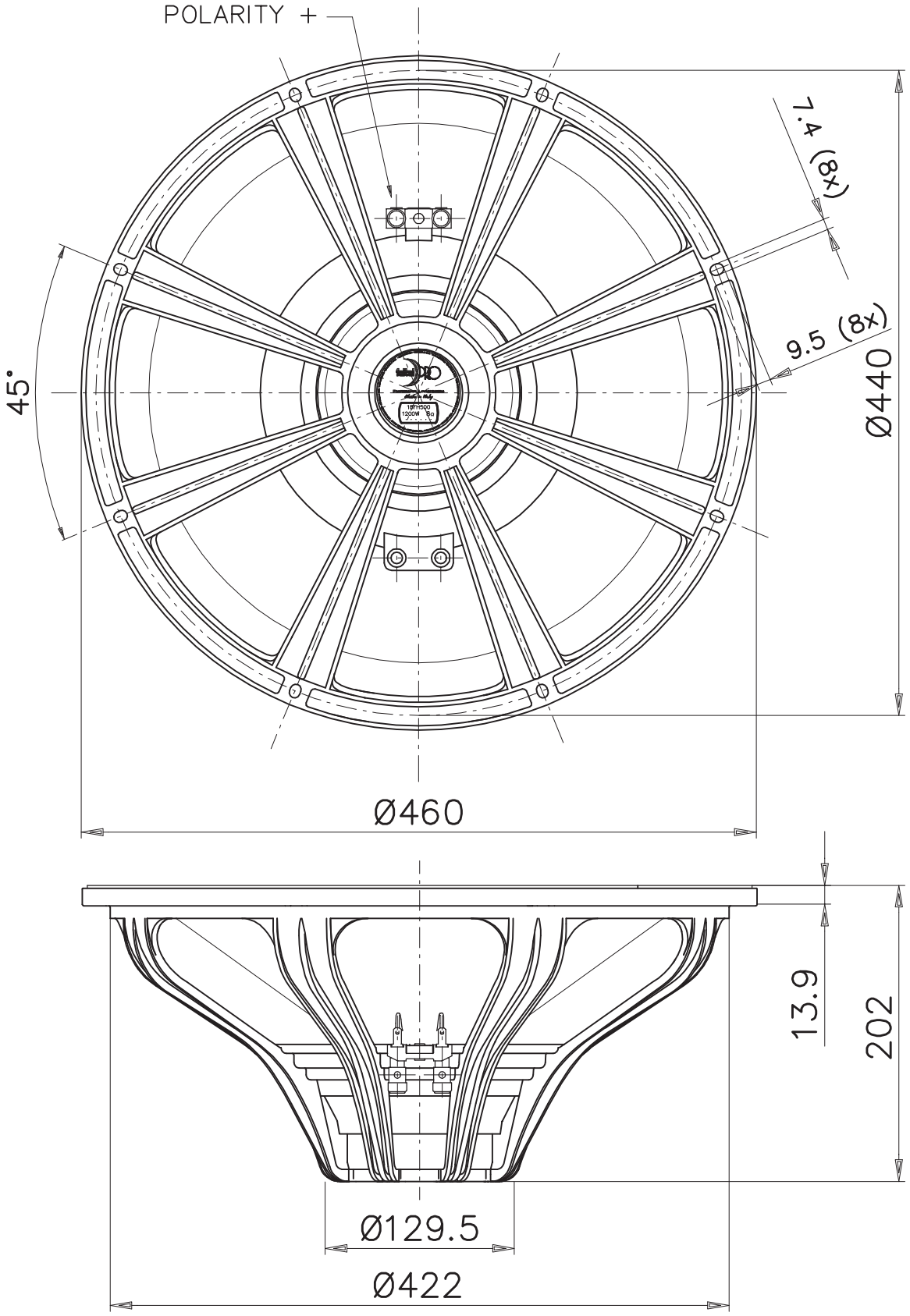
18” - 600 W - 99 dB - 8Ω