faital PRO PROFESSIONAL LOUDSPEAKERS

12FH520

12" - 600 W - 97 dB - 4 Ohm



NOMINAL SPECIFICATIONS

Nominal Diameter	300 mm (12 in)
Overall Diameter	316 mm (12.44 in)
Bolt Circle Diameter	298.5 mm (11.75 in)
Baffle Cutout Diameter	284 mm (11.18 in)
Depth	155.75 mm (6.13 in)
Flange and Gasket Thickness	12.5 mm (0.49 in)
Net Weight	**4.2 kg (9.3 lb)**
Shipping Box (Single Carton Box)	350 x 346 x 216 mm (13.8 x 13.6 x 8.5 in)
Shipping Weight	5 kg (11.0 lb)

PART NUMBER

Push Terminals - 4 Ohm Version	03004181
Recone Kit - 4 Ohm Version	R3004181

TECHNICAL PARAMETERS

Nominal Impedance	4 Ohm
Minimum Impedance	3.9 Ohm
AES Power Handling **(1)**	600 W
Maximum Power Handling (2)	**1200 W**
Sensitivity (1W/1m)	**97 dB**
Frequency Range	50÷4000 Hz
Voice Coil Diameter	**77 mm (3 in)**
Winding Material	Al
Former Material	Glass Fiber
Winding Depth	18 mm (0.71 in)
Magnetic Gap Depth	**12 mm (0.47 in)**
Flux Density	1.1 T
Magnet	Neodymium Slug
Basket Material	Aluminum
Demodulation	Aluminum Ring
Cone Surround **(3)**	Triple Roll
NET Air Volume filled by Loudspeaker	2.4 dm^3 (0.085 ft^3)
Spider Profile	1x variable height waves

THIELE & SMALL PARAMETERS

Fs	50 Hz
Re	3.3 Ohm
Qes	0.28
Qms	6.32
Qts	0.27
Vas	65.5 dm^3 (2.31 ft^3)
Sd	540 cm^2 (83.70 in^2)
Xmax **(4)**	7.00 mm
Xdamage **(5)**	19.75 mm
Mms	63.0 g
Bl	15.3 N/A
Le	0.71 mH
Mmd	48.8 g
Cms	0.16 mm/N
Rms	3.1 kg/s
Eta Zero	2.85 %
EBP	179 Hz

NOTES:

(1) 2 Hours Test According to AES 2-1984 Rev. 2003

(2) Maximum power is defined as 3dB greater than nominal power.

(3) Treated Polycotton

(4) Xmax= [(winding depth - magnetic gap depth)/2] + (magnetic gap depth/3)

(5) Maximum excursion before permanent damage

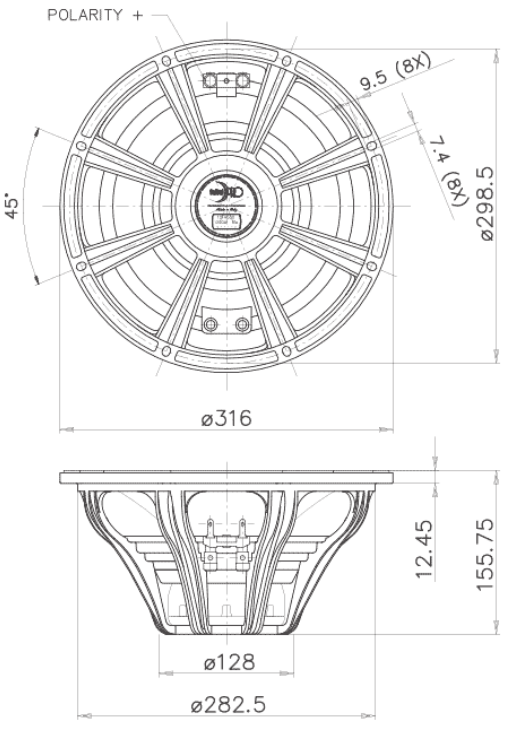

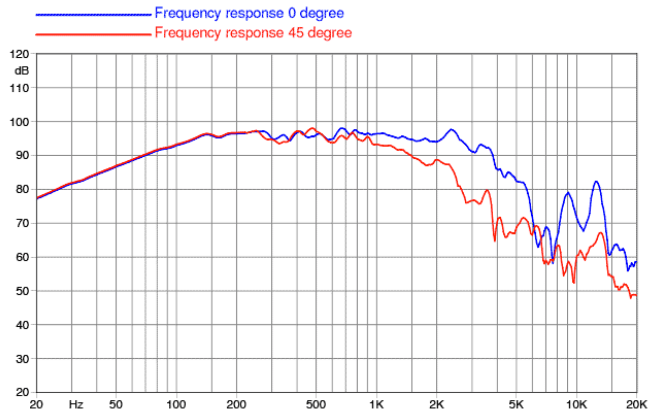

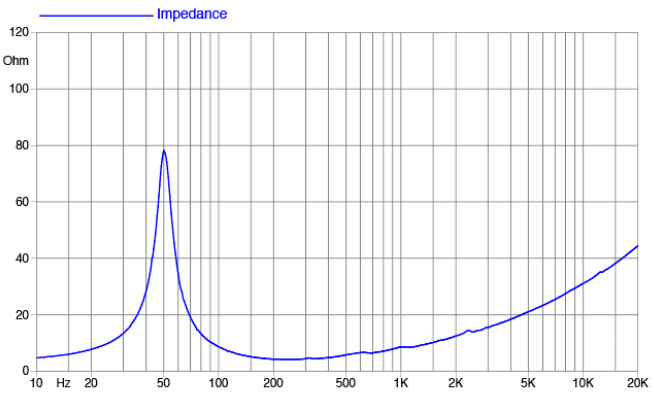

©Copyright 2026 **Faital S.p.A.** • All rights reserved.