PROFESSIONAL LOUDSPEAKERS

10FH500

10" - 500 W - 96 dB - 4 Ohm



NOMINAL SPECIFICATIONS

Nominal Diameter	250 mm (10 in)
Overall Diameter	261 mm (10.28 in)
Bolt Circle Diameter	246 mm (9.69 in)
Baffle Cutout Diameter	232 mm (9.13 in)
Depth	141.3 mm (5.56 in)
Flange and Gasket Thickness	12.5 mm (0.49 in)
Net Weight	**3.4 kg (7.5 lb)**
Shipping Box (Single Carton Box)	294 x 290 x 203 mm (11.6 x 11.4 x 7.8 in)
Shipping Weight	4 kg (8.8 lb)

PART NUMBER

Push Terminals - 4 Ohm Version	02504043
Recone Kit - 4 Ohm Version	R2504043

TECHNICAL PARAMETERS

Nominal Impedance	4 Ohm
Minimum Impedance	4 Ohm
AES Power Handling **(1)**	500 W
Maximum Power Handling (2)	**1000 W**
Sensitivity (1W/1m)	**96 dB**
Frequency Range	60÷4000 Hz
Voice Coil Diameter	**77 mm (3 in)**
Winding Material	Al
Former Material	Glass Fiber
Winding Depth	18 mm (0.71 in)
Magnetic Gap Depth	**10.5 mm (0.41 in)**
Flux Density	1.2 T
Magnet	Neodymium Slug
Basket Material	Aluminum
Demodulation	No
Cone Surround **(3)**	Triple Roll
NET Air Volume filled by Loudspeaker	1.6 dm^3 (0.057 ft^3)
Spider Profile	1x constant height waves

THIELE & SMALL PARAMETERS

Fs	60 Hz
Re	3.3 Ohm
Qes	0.26
Qms	6.2
Qts	0.25
Vas	24.2 dm^3 (0.85 ft^3)
Sd	351 cm^2 (54.41 in^2)
Xmax **(4)**	7.25 mm
Xdamage **(5)**	12.5 mm
Mms	50.1 g
Bl	15.5 N/A
Le	0.64 mH
Mmd	42.7 g
Cms	0.14 mm/N
Rms	3.0 kg/s
Eta Zero	1.95 %
EBP	231 Hz

NOTES:

(1) 2 Hours Test According to AES 2-1984 Rev. 2003

(2) Maximum power is defined as 3dB greater than nominal power.

(3) Treated Polycotton

(4) Xmax= [(winding depth - magnetic gap depth)/2] + (magnetic gap depth/3)

(5) Maximum excursion before permanent damage

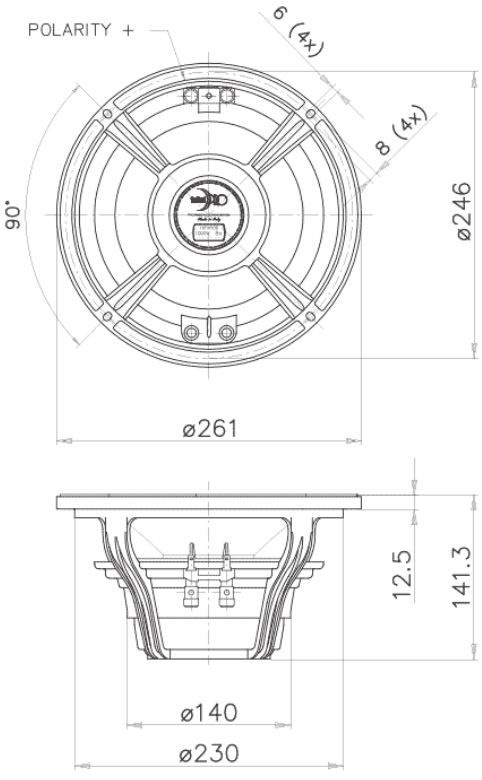

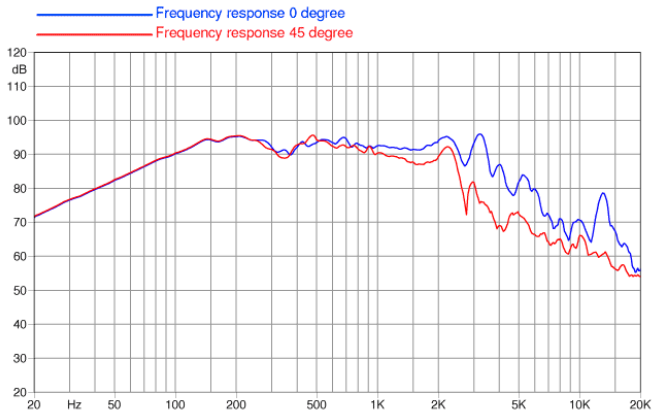

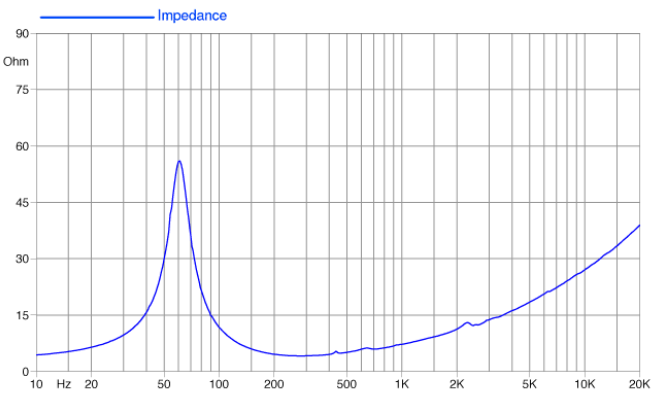

©Copyright 2026 **Faital S.p.A.** • All rights reserved.