PROFESSIONAL LOUDSPEAKERS

8RS340

8" - 300 W - 91 dB - 8 Ohm

NOMINAL SPECIFICATIONS

Nominal Diameter	200 mm (8 in)
Overall Diameter	223.7/207.9 mm (8.81/8.18 in)
Bolt Circle Diameter	210 mm (8.27 in)
Baffle Cutout Diameter	183 mm (7.20 in)
Depth	104.8 mm (4.13 in)
Flange and Gasket Thickness	16 mm (0.63 in)
Net Weight	**2.5 kg (5.5 lb)**
Shipping Box (Single Carton Box)	235 x 235 x 155 mm (9.3 x 9.3 x 6.1 in)
Shipping Weight	3.2 kg (7.1 lb)

PART NUMBER

Push Terminals - 8 Ohm Version	02004375

NOTES:

(1) 2 Hours Test According to AES 2-1984 Rev. 2003
(2) Maximum power is defined as 3dB greater than nominal power.
(3) NBR (Rubber)
(4) Xmax= [(winding depth - magnetic gap depth)/2] + (magnetic gap depth/3)
(5) Maximum excursion before permanent damage

TECHNICAL PARAMETERS

Nominal Impedance	8 Ohm
Minimum Impedance	6 Ohm
AES Power Handling **(1)**	300 W
Maximum Power Handling (2)	**600 W**
Sensitivity (1W/1m)	**91 dB**
Frequency Range	50÷6300 Hz
Voice Coil Diameter	**65 mm (2.56 in)**
Winding Material	Al
Former Material	Glass Fiber
Winding Depth	17.4 mm (0.69 in)
Magnetic Gap Depth	**8.2 mm (0.32 in)**
Flux Density	1.2 T
Magnet	Neodymium Slug
Basket Material	Aluminum
Demodulation	No
Cone Surround **(3)**	Half Roll
NET Air Volume filled by Loudspeaker	0.82 dm^3 (0.029 ft^3)
Spider Profile	1x constant height waves

THIELE & SMALL PARAMETERS

Fs	42 Hz
Re	5.3 Ohm
Qes	0.36
Qms	6.6
Qts	0.34
Vas	25.5 dm^3 (0.90 ft^3)
Sd	227.8 cm^2 (35.31 in^2)
Xmax **(4)**	7.33 mm
Xdamage **(5)**	16.85 mm
Mms	40.8 g
Bl	13 N/A
Le	0.64 mH
Mmd	36.9 g
Cms	0.35 mm/N
Rms	1.6 kg/s
Eta Zero	0.54 %
EBP	117 Hz

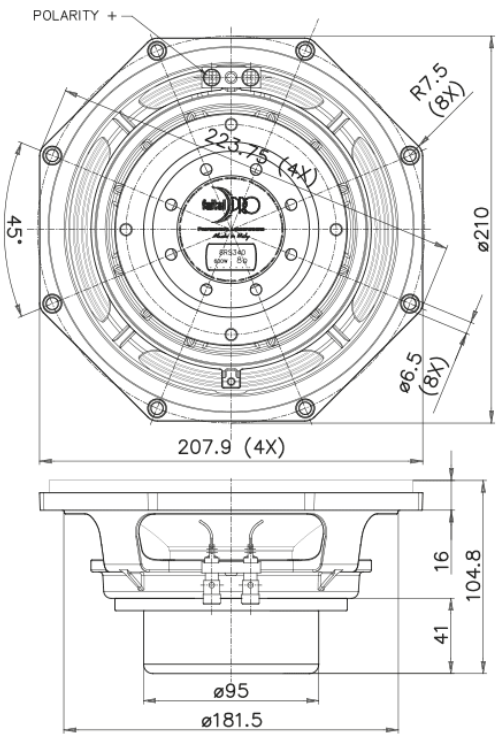

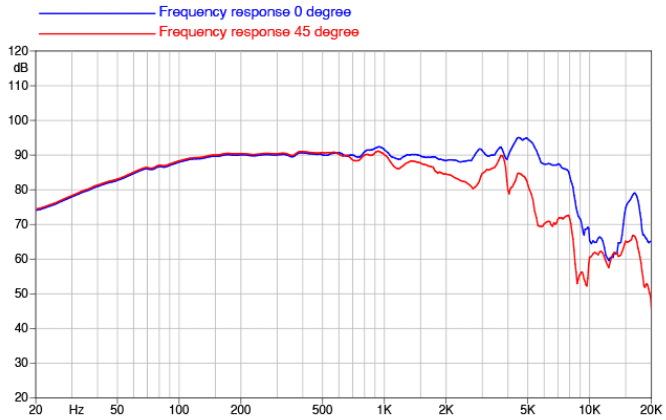

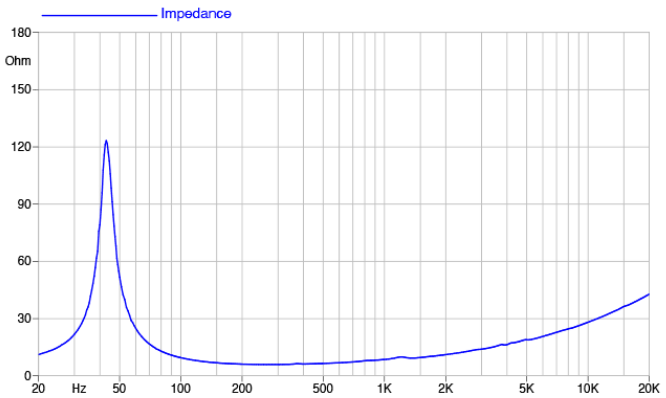

©Copyright 2024 **Faital S.p.A.** • All rights reserved.