PROFESSIONAL LOUDSPEAKERS

Made in Italy

FD371
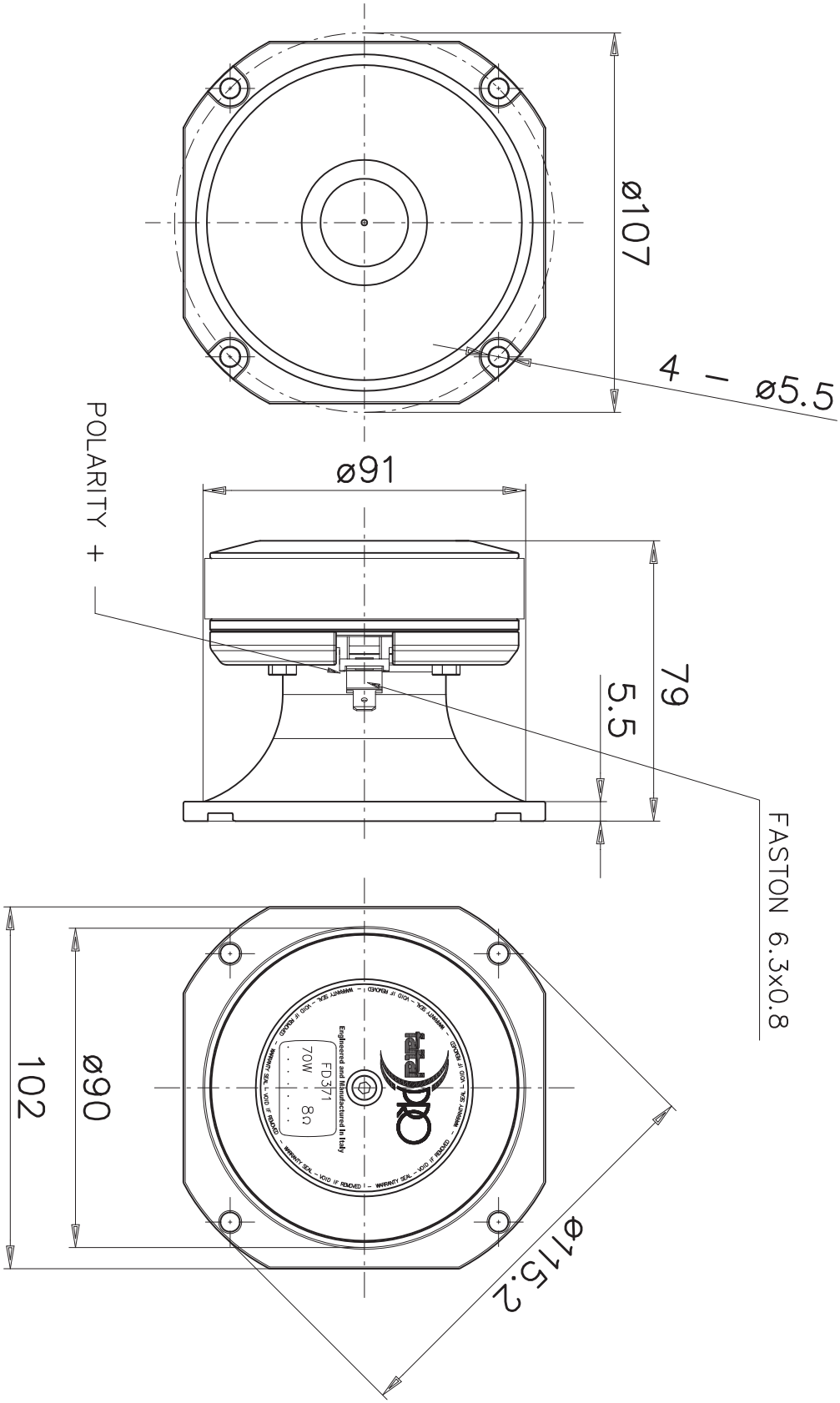
37 mm - 35 W - 107 dB - 8Ω